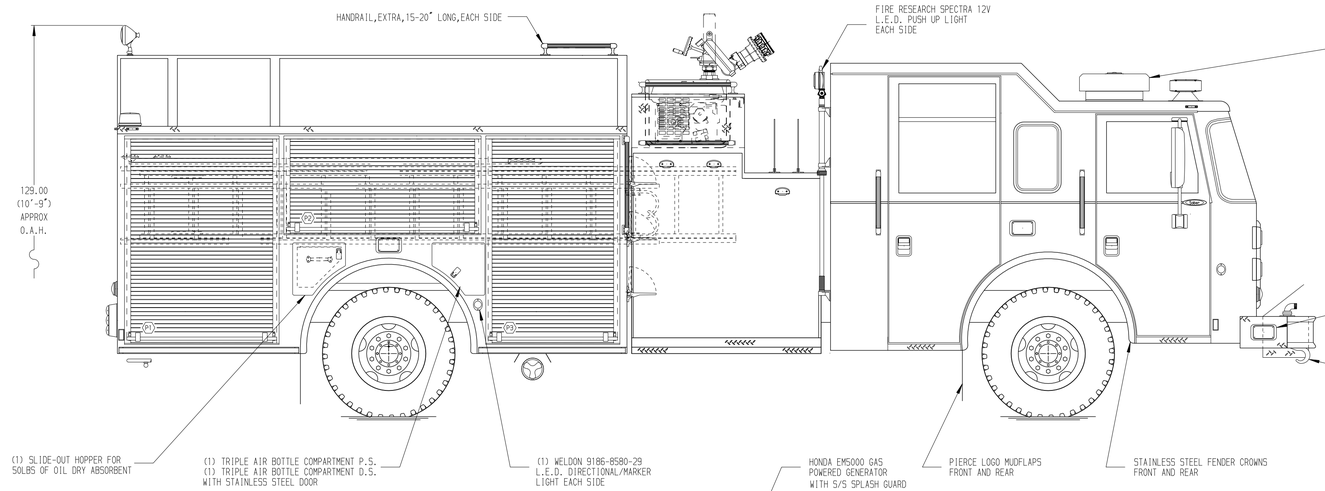

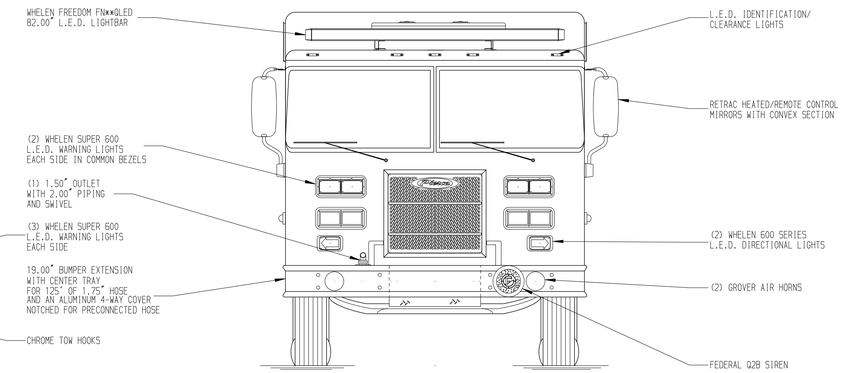

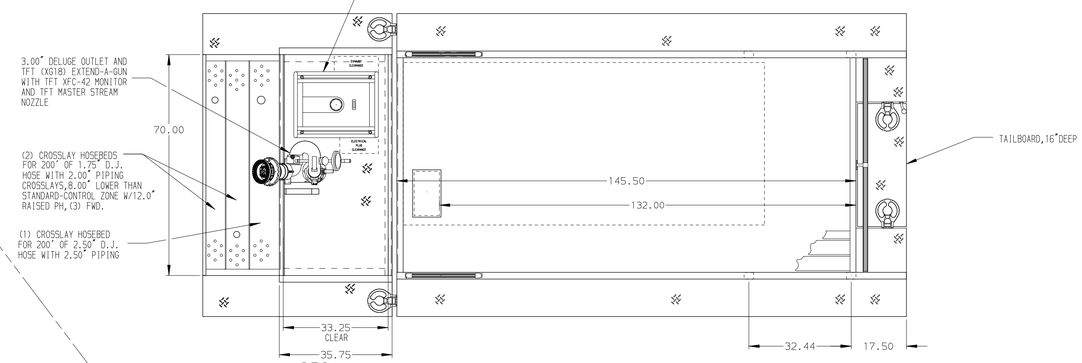

HOSEBED CAPACITIES
1. 250' OF 2.50" D.J. HOSE
2. 500' OF 4.00" L.D. HOSE
3. 500' OF 4.00" L.D. HOSE

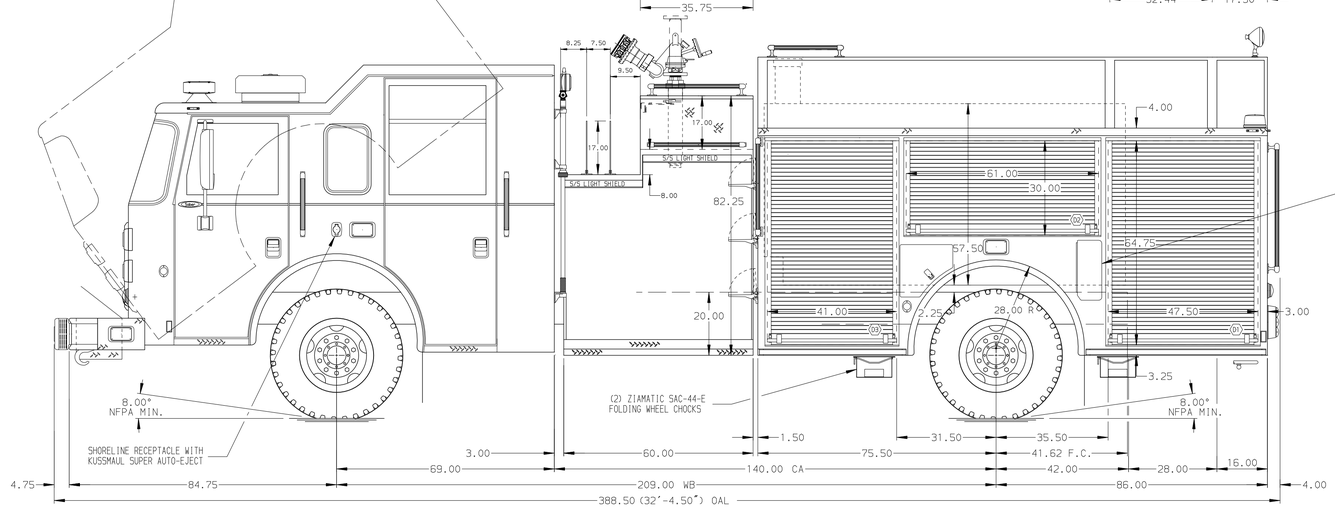

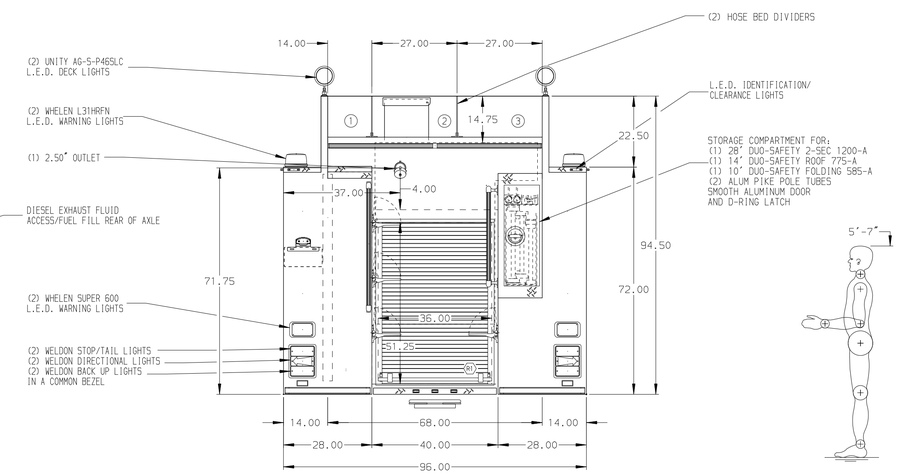

ALUMINUM BODY

NOTE

DIMENSIONS SHOWN ARE APPROXIMATE AND ARE SUBJECT TO MINOR DEVIATIONS AS MAY OCCUR OR BE NECESSARY IN CONSTRUCTION.
MINOR DETAILS NOT SHOWN.

1. ALUMINUM TREADPLATE EXTERIOR REAR WALL OF CAB
2. BATTERY CHARGER LOCATED BEHIND DRIVER SEAT
3. BATTERY CHARGER INDICATOR IN D.S. STEP WELL
4. SUB-FEED CIRCUIT BREAKER PANEL IN COMPARTMENT D1
5. S/STL PROTECTIVE GUARD FOR ROLL-UP DOOR IN COMPARTMENT D1,D2,D3,P1,P2,P3,R1
6. PIERCE L.E.D. DUAL COMPARTMENT LIGHT STRIPS LOCATED PER SHOP ORDER
7. SHELF TRACK LOCATED IN COMPARTMENT D1,D2,D3,P1,P2,P3,R1
8. ONE ADJUSTABLE SHELF (FULL DEPTH/FULL WIDTH) IN COMPARTMENT PER SHOP ORDER
9. ONE ADJUSTABLE TILT/SLIDE-OUT BRUSHED ALUMINUM TRAY IN COMPARTMENT PER SHOPP ORDER
10. ONE FLOOR MOUNTED SLIDE-OUT TRAY IN COMPARTMENT PER SHOP ORDER
11. CIRCUIT BREAKER PANEL IN COMPARTMENT D1
12. (1) 120V TWIST-LOCK RECEPTACLE ON PUMP PANEL EACH SIDE
13. (2) 120V DUPLEX RECEPTACLES IN EMS COMPARTMENT
14. AIR INLET WITH DISCONNECT COUPLING ON D.S. PUMP PANEL

REV	DATE	BY	CH
3	09JAN15	JCH	CAG
2	05DEC14	JAF	CAG

CHASSIS DATA
MAKE: PIERCE
MODEL: SABER

Pierce MANUFACTURING INC.

TITLE: 1500-D-1000P,161",FULL HEIGHT & DEPTH D.S. FDLER P.S.,(3) X-LAYS,DELUGE,GENERATOR
FOR: FLUSHING FIRE DEPARTMENT FLUSHING, MICHIGAN
DWG NO.: 28263AD

JOB NO.	28263
SCALE	1:24
DATE	
DRAWN BY	JWO 04SEP14
CHECKED BY	MNE 04SEP14
SHEET SIZE	D
SHEET NO.	1 OF 1

View File Created 12-JAN-2015 09:56:26